A Design for Testability Technique for Quantum Reversible Circuits

Joyati Mondal*, Debesh K. Das*, Dipak K. Kole†, Hafizur Rahaman‡
*Dept. of Computer Science & Engg., Jadavpur University, Jadavpur, Kolkata-32,India
†Dept. of Computer Science & Engg., St. Thomas' Collage of Engg. & Tech., Khidderpore, Kolkata
‡Dept. of Information Technology, Bengal Engineering and Science University Shibpur, Howrah, India

***Abstract*— This paper shows that in a $(n \times n)$ reversible circuit implemented with k-CNOT gates, addition of only two extra input lines along with insertion of few k-CNOT gates can yield an easily testable design, which admits a universal test set of size (n+1) to detect all SMGFs, PMGFs, and detectable RGFs in the circuit.**

***Index Terms*—Missing-gate fault, quantum computing, reversible logic, testable design, universal test set**

I. Introduction

Management of energy loss had been an inherent problem in digital logic circuits [1, 2]. According to Landauer's principle energy loss is inherent in non-reversible circuit due to irreversibility of information processing[1]. Reversible logic can be employed to design information lossless circuits, and therefore, has the potential of reducing power consumption drastically [3-6]. It also provides a basis for the newly emerging paradigm of quantum computing [7-9].

Conventional logic gates such as AND, OR, or EXOR used in digital design are not reversible. To design a reversible circuit, only reversible gates can be used, for example the controlled-not (CNOT) gate proposed by Feynman[10], Toffoli[12], or Fredkin[11] gates, etc.

Several researchers [13, 14, 18, 19] have studied the problem of fault modelling and testing of reversible logic circuits. Fault models, namely, single missing-gate fault(SMGF), repeated-gate fault (RGF), partial missing-gate fault(PMGF), and multiple missing gate fault (MMGF), have been found to be more suitable for modelling defects in quantum *k*-CNOT gates [14, 15, 19]. They capture better representation of physical failures in reversible logic, particularly for quantum technologies. A design for testability techniques for SMGF faults was described in [14]. Universal testability of reversible logic circuits designed with *k*-CNOT gates under PMGF, SMGF fault model has been investigated in [18].

In this paper, we propose a design for testability (DFT) technique to detect all PMGFs, SMGFs, and detectable RGFs in a reversible circuit. Our method suggests a universal test set to detect such faults.

II. Preliminaries

A. Reversible logic

A reversible function has equal number of inputs and outputs, and simply induces a permutation on the set of input vectors to produce an output vector. There is a bijection mapping between inputs and outputs. Further, in a circuit implementation with reversible gates, no fanout is allowed.

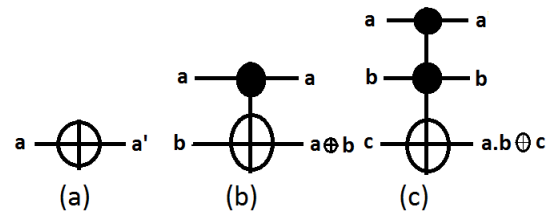

Fig. 1: Different types of CNOT based Reversible gates : (a) NOT gate(b) CNOT gate(c) Toffoli gate

B. Reversible gates

The basic CNOT type reversible gates used for synthesis are the following:
(i) $(1 \times 1) NOT(x_1 \rightarrow x_1')$
(ii)(2×2) controlled NOT (CNOT) :$(x_1, x_2) \rightarrow (x_1, x_1 \oplus x_2)$
(iii)(3×3) Toffoli gate $(x_1, x_2, x_3) \rightarrow (x_1, x_2, x_1 x_2 \oplus x_3)$.
A generalized Toffoli gate has a set of control input *C*, a target input set *T*, and has the form *TOF(C;T)*, where $C = (x_{i1}, x_{i2}, ..., x_{ik})$ $T = \{x_j\}$ and $C \cap T = \phi$. It maps an input vector $(x_1^0, x_2^0, ..., x_n^0)$ to $(x_1^0, x_2^0, ..., x_{j-1}^0, x_j^0 \oplus (x_{i1}^0.x_{i2}^0.....x_{ik}^0), x_{j+1}^0, ..., x_n^0)$. Thus, a NOT gate is $TOF(x_j)$, a generalized Toffoli gate which has no controls. The CNOT gate is $TOF(x_i, x_j)$, a generalized Toffoli gate with one control bit [14, 21]; this is also known as Feynman gate. The simple (3×3) Toffoli gate is a generalized Toffoli gate with two controls [16]. A *k*-CNOT gate has *k* control inputs $x_1, x_2, ..., x_k$ and one target input t. It maps the input vector $(x_1, x_2, ..., x_k, t)$ to the output vector $(x_1, x_2, ..., x_k, t \oplus x_1.x_2...x_k)$. Fig. 1 shows the standard graphics symbol for some common CNOT gates based reversible gate.

C. Quantum cost Analysis

The quantum cost of a gate G, $\mid G \mid$ is the number of elementary quantum operations required to realize the function given by *G*. The more controls a generalized Toffoli gate has, the larger its cost in terms of the number of elementary quantum transformations required.

D. Fault detection in a reversible circuit

Several fault models for *k*-CNOT based reversible circuits were introduced earlier [14, 15, 19] as described below.

978-1-4799-2096-9/13/$31.00 ©2013 IEEE

Number of controls(n)	Quantum cost $Q_c(n)$
0	1
1	1
2	5
3	13
4	29
5	61
6	125
7	253
8	509

TABLE I: Quantum cost of Toffoli gates

1) Single Missing Gate Fault(SMGF): A *single missing-gate fault* (SMGF) describes the removal of one *k*-CNOT gate from the circuit. Fig. 2(b) shows an SMGF in the circuit shown in Fig. 2(a). The box in Fig. 2(b) marks the position of the missing gate in the fault free circuit. An SMGF is detected by any input vector which justifies the logical values of 1 at all of the gate's control inputs, and any value either 0 or 1 on the target input as well as on the wires not connected to the gate. In the example of Fig. 2(b), if we apply (1,0,1,1) at the input of the circuit, the normal output in Fig. 2(a) would be (1,1,0,1), whereas in the presence of SMGF fault marked by the dotted box, the output in Fig. 2(b) will be (1,0,1,1).

2) Models derived from single missing-gate fault: A number of fault models have been derived from SMGFs. These include the repeated-gate fault model, the multiple missing-gate fault model, the partial missing-gate fault model [14]

The *repeated-gate fault* (RGF) models assumes that a gate in a circuit is repeated, i.e shows up several times. It is easy to see that, if the number of occurrences is even, an RGF's effect is identical to that of an SMGF at the same gate, and it does not alter the function of the circuit [14]. Hence, the RGF model is subsumed by the SMGF model. Fig. 2(c) shows an example, where first gate is repeated in the circuit shown in Fig. 2(a). If we apply (1,0,1,1), the normal output would be (1,1,0,1), whereas, in the presence of the the above RGF marked by the box, the output will be (1,0,1,1). Hence, it is detected by the vector (1,0,1,1).

The *multiple missing-gate fault* (MMGF) model assumes that several consecutive gates are missing [14]. A complete SMGF test is not guaranteed to cover all MMGFs or multiple SMGFs [19]. Fig.2(d) shows an MMGF in which the position of the consecutive missing gates are shown by a box. This fault is detected by the vector (1,0,1,1).

A *partial missing-gate fault* (PMGF) [14] corresponds to removing *m* of the *k* control inputs of a *k*-CNOT gate, thus transforming it into a (*k*-*m*)-CNOT gate. The number *m* is called the *order* of the PMGF. Fig. 2(e) shows an PMGF with a box marking the position of the missing control.

In the circuit, if we apply (1,0,0,1), the normal output would be (1,0,0,1), whereas, in the presence of the first order PMGF fault as shown, the output will be (1,1,1,0). Hence, the vector (1,0,0,1) detects this fault. For a gate with *k* control lines, a first order PMGF is detected by a 0 input at the missing control line with 1s in all other control lines. All *k* first-order PGMFs of a gate have detection conditions that conflict with each other and with the SMGF at the same gate, *k*+1 test vectors are required to test for all faults. However, these vectors are guaranteed to also cover all the higher-order PMGFs at the same gate [18].

Lemma 1: For a reversible gate with *n* inputs $x_1, x_2, ..., x_n$, having any arbitrary number of control inputs, the detection of all SMGFs, all PMGFs, all detectable RGFs involving this gate requires the following test set for detection.

$$T = \begin{pmatrix} x_1 & x_2 & \cdots & x_n \\ 0 & 1 & \cdots & 1 \\ 1 & 0 & \cdots & 1 \\ \vdots & \vdots & \ddots & \vdots \\ 1 & 1 & \cdots & 0 \end{pmatrix}$$

Proof: Obvious. ■

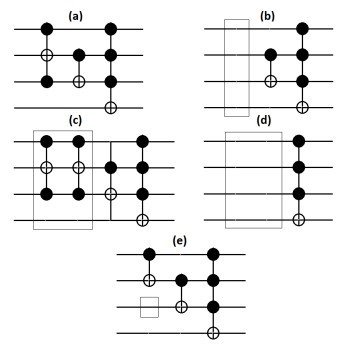

Fig. 2: (a)Fault free circuit;(b)the same circuit with SMGF,(c)an RGF, (d)an MMGF, (e) a PMGF.

III. TESTABLE DESIGN

Design for testability (DFT), describes a class of design techniques to simplify test generation or optimize test application. Given a reversible circuit, our goal is to design a DFT by appending some additional gates circuitry with at least one additional input line C_1 such that it becomes testable by a universal test set. Each gate is the augmented circuit has a control connected with this additional input line. In our DFT design we are using two additional input lines C_1 and C_2. For any gate *G* in the original circuit we are replacing it by a set of gates *Pre(G)* followed by two gates *G* and *Post(G)*, where *Post(G)* is a TOF gate with one or two controls, with one control at C_1 and target line is at *TARGET(G)*. *Pre(G)* involves the line C_2. For Testing purpose, C_2 is set to value 0, at normal condition it can be anything. *Pre(G)* consists of gates, whose target lines are always in line C_2. Thus it does not affect the original functionality of the circuit. Consider that gate *G* has the control inputs at *k* lines $x_{i_1}, x_{i_2}, ..., x_{i_k}$, where $0 \leq k \leq n-1$. The design *Pre(G)* and *Post(G)* is

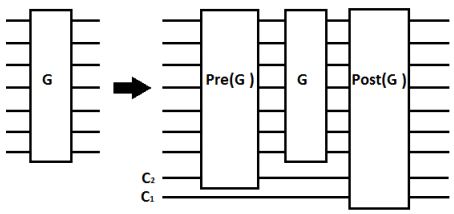

Fig. 3: Proposed DFT to replace G.

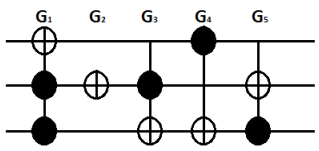

Fig. 4: A reversible circuit

dependent on the number of control inputs (k) at G. There may be two cases depending on the number of controls inputs (k) in G.

Case 1 : k=0

In this case *Pre(G)=NULL*. *Post(G)* is designed in the same way of duplication as in [18], i.e. *Post(G)* is same as G with one additional control input C_1. On this case, the output of *Post(G)* remains identical to the input in G.

Example 1 : Consider the gate G_2 in Fig. 4. In its DFT design in Fig. 5, the $Pre(G_2)$ is *NULL*, *Post*(G_2) is shown as a Toffoli gate with 1 control line.

Case 2 : k>0 .

Suppose the gate G^* is the last gate before G in the original circuit, where *Pre*(G^*) $\neq$ *NULL*. Let $x_{i_1}, x_{i_2}, ..., x_{i_m}$ are the m input lines where G and G^* are differing in control bits. We use m Toffoli gates in *Pre(G)* where each gate is $TOF(x_{i_j}, C_2)$, for $1 \leq j \leq m$. If the total number of targets in the line C_2 after the application of m such gates is even include another gate TOF(C_1, C_2) in *pre(G)*. The gate *Post(G)* is the TOF($C_1, C_2, TARGET(G)$).

Example 2 : Considers the gates G_1, G_3 and G_4 in Fig.4. $Pre(G)$ & $Post(G)$ of these gates are shown in Fig.5.

Pre(G) and *Post(G)* are introduced to maintain the same test set T to be applied to the next gate of G. For this reason, we may skip the design of *Pre(G)* and *Post(G)* when G is the last gate in the original circuit. The complete procedure is well described in the algorithm DFT.

Lemma 2: The Testable design derived using the DFT algorithm is testable for all SMGF, PMGF and detectable RGF using the following Universal test set of length n+1.

$$S_U = \begin{pmatrix} x_1 & x_2 & \cdots & x_n & C_1 & C_2 \\ 0 & 1 & \cdots & 1 & 1 & 0 \\ 1 & 0 & \cdots & 1 & 1 & 0 \\ \vdots & \vdots & \ddots & \vdots & \vdots & \vdots \\ 1 & 1 & \cdots & 0 & 1 & 0 \\ 0 & 0 & \cdots & 0 & 0 & 1 \end{pmatrix}$$

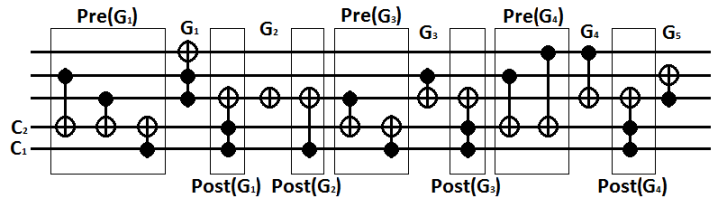

Fig. 5: Testable design for the reversible circuit in Fig. 4

Algorithm 1 DFT

Input: A reversible circuit RC of size n with depth N consisting of N number of gates $G_1, G_2, ..., G_N$. Gate G_i with its control at lines $x_{i_1}, x_{i_2}, ..., x_{i_l}$ gets an input $x_1, x_2, ..., x_n$.

Output: Testable Design for the reversible circuit RC

1: Introduce 2 control lines C_1, C_2.
2: *Con(G)*=Number of Controls in gate G.
$N_T(C_2)$ = Number of Targets present in line C_2.
Initially $N_T(C_2)$=0.
3: **for** i=1 to N-1
  3.1. **if** ($Con(G_i) == 0$)
    3.1.1. duplicate G_i to get *Post*(G_i) with an additional control on C_1
  3.2. **if**($Con(G_i) \neq 0$)
    3.2.1. **for** j=1 to n
      3.2.1.1. **if** (control at x_j is present either in G_i or G^* but not on both) {G^* is the last gate before G_i with $Pre(G^*) \neq$ *NULL*}
        3.2.1.1.1. Introduce TOF(x_j, C_2) in $Pre(G_i)$ before G_i
        3.2.1.1.2. $N_T(C_2)$=$N_T(C_2)$+1;
    3.2.2. **if** ($N_T(C_2)$ is even)
      3.2.2.1. Introduce TOF(C_2, C_1) before G_i in $Pre(G_i)$
    3.2.3. Introduce TOF($C_1, C_2, TARGET(G_i)$) in $Post(G_i)$ After G_i
4: **END**

Proof: Notice that S_U includes T of Lemma 1 at the inputs $x_1, x_2, ..., x_n$ of any gate. For a gate G_i with no control, following the step 3.1 of the algorithm DFT we always get T at the inputs of the next gate. For $k > 0$ when we follow the step 3.2 of DFT algorithm, we are appending $Pre(G_i)$ to the gate G_i. The characteristics of S_U is such that at control line C_2, we always get 1 (0) if the gate G_i gets 1 (0) at all (any) of its control lines. Thus when the control inputs of G_i are 1, it complements the line of $TARGET(G_i)$, but as C_2 becomes 1, TOF($C_1, C_2, TARGET(G_i)$) in $Post(G_i)$ again complements the line. So the same test set T is always applied to next gate in the original circuit. Thus in the DFT design, every gate of the original circuit gets the test set T of *Lemma 1*, which is sufficient to detect the faults in the gate.

Circuit	size	depth	% increment in Q_c	
			DFT[18]	Our Design
5mod5d1	6	17	227.56%	63.784%
nth_prime6_inc	6	55	220.54%	60.26%
rd53d1	7	30	222.41%	58.19%
rd53d4	7	20	231.62%	88.03%
mod5adder	6	21	198.4%	72.8%
ham7tc	7	23	276.47%	177.64%
rd84d1	15	28	277.78%	188.89%
9symd2	10	20	283.33%	130.55%
6 symd2	10	20	283.33%	195.83%
2of5d2	7	12	290%	210%
rd73d2	10	20	273.94%	189.47%
hwb5tc	5	56	252.38%	136.50%
mod5d2	5	9	276%	180%

TABLE II: Overhead for proposed DFT Design.

Now we look into the testing of the additional gates in *Pre(G_i)* and *Post(G_i)*. *Pre(G_i)* contains only 1-CNOT gates with single control either at one of the input lines $x_1, x_2, ..., x_n$ or C_1. It implies that to detect all faults in any gate having control in *Pre(G_i)* we require two test vectors having 0 and 1 in the line (x_i or C_1). The test set S_U and DFT design are such that at each gate position 0 and 1 are appearing at each x_i line (1 $\leq$ i $\leq$ n) of the gate by first n vectors in S_U. Moreover 0 (1) is appearing in line C_2 at each gate position in last [all first n] vector[s] in S_U. $Post(G_i)$ with one control input C_1 requires two tests with 1 and 0 appearing at the C_1 line of the gate $Post(G_i)$. As C_1 has no target, these are achieved by S_U. For $Post(G_i)$ with two control inputs C_1 and C_2, we require (0,1), (1,1) and (1,0) at (C_1, C_2) lines of $Post(G_i)$. The last vector of S_U is obviously producing (0,1) at (C_1, C_2) line of $Post(G_i)$. There exists at least one input vector among the first *n* vectors in S_U for which $TARGET(G_i)$ becomes complemented [uncomplemented], thus producing (1,1) [(1, 0)] at the lines (C_1, C_2) of the gate $Post(G_i)$. Hence, all faults in the additional circuits are also detected. ■

IV. Experimental Result

We have studied several examples of reversible benchmark circuits [17], the results of which are shown in the Table II. Column 1 shows the circuit name, column 2 denotes input size, column 3 presents the gate count. The increment in quantum cost (Q_c) in the testable circuit as designed by the DFT [18] is shown in column 4. The increment in quantum cost (Q_c) in the testable circuit as designed by the proposed DFT is shown in column 5. From Table II it is clear that the proposed DFT compares favorably with the earlier design.

V. Conclusion

We proposed a novel DFT technique for quantum reversible circuits to make them testable with a universal test set of length *n*+1. To design this DFT, we appended some additional gates and two additional input lines with the original circuit. Our design offers less quantum cost in comparison to the similar work [18].

References

[1] D. Sylvester, and A. Srivastava, "Computer-Aided Design for Low-Power Robust Computing in Nanoscale CMOS", *Proc. IEEE*, vol. 95, no. 3, pp. 507-529, March 2007.

[2] A. J. Al-Khalili, Y. Zhu, and D. Al-Khalili, "A Module Generator for Optimized CMOS Buffers", *IEEE TCAD*, vol. 9, no. 10, pp. 1028-1046, October 1990.

[3] R. Landauer, "Irreversibility and heat generation in the computing process", *IBM Research and Development*, vol. 5, pp. 183-191, 1961.

[4] C. H. Bennett, "Logical reversibility of computation", *IBM J.Research and Development,* vol. 17, pp. 525-532, Nov. 1973.

[5] C. H. Bennett, "Notes on the history of reversible computation", *IBM J.Research and Development,* vol.32, pp. 16-23, January 1988.

[6] R. P. Feynman, *Feynman Lectues on Computation*. (A. J. G. Hey and R. W.Allen, Ed.), Perseus Books, USA, 1996.

[7] M. Nielsen, and I. Chuang, *Quantum Computation and Quantum Information*. Cambridge University Press, 2000.

[8] N. Gershenfeld, and I.L. Chuang, "Quantum computing with molecules", *Scientific American*, june 1998.

[9] J. Preskill, *Lecture notes in Quantum Computing*. Technical Report,(http://www.Theory.caltech.edu/ preskill/ph229).

[10] R. Feynman, "Quantum Mechanical computers", *Optics News*, vol.11, pp. 11-20, 1985.

[11] E. Fredkin, and T. Toffoli, "Conservative logic", *Int. J. of Theoretical Physics*, vol.21, pp. 219-253, 1982.

[12] T. Toffoli, "Reversible Computing", Tech memo MIT/LCS/TM-151, MIT Lab for Comp. Sci., 1980.

[13] K. N. Patel, J. P. Hayes, and I. L. Markov, "Fault testing of reversible circuits", *In Proc. VTS*, pp. 410-416, 2003.

[14] J. P. Hayes, I. Polian, and B. Becker, "Testing for missing-gate faults in reversible circuits", *In Proc. Asian Test Symposium*, pp. 100-105, 2004.

[15] I. Polian, J. P. Hayes, T. Fienn, and B. Becker, "A Family of logical faults models for Reverrsible circuits ", *In Proc. Asian Test Symp.*, Kolkata, India, pp. 422-427, 2005.

[16] D. Maslov, *Reversible Logic Synthesis*. Ph.D Thesis, The University of new Brunswick, Canada, September 2003.

[17] D. Maslov, G. Dueck, and N. scoll, *Reversible Logic Synthesis Benchmark page*. www.cs.uvic.ca/ dmaslov/, 2004.

[18] H. Rahaman, D. Kole, D. K. Das, and B. B. Bhattacharya, "On The detection of missing gate fault in reversible circuit by a universal test set", *In Proc. of Int. conf. in VLSI Design*, pp. 163-168, 2008.

[19] I. Polian, and J. P. Hayes, "Advanced Modelling of faults in reversible Circuits ", *In Proc. East-West Design & Test Symposium*, pp. 376-381, 2010.